Dassault Systèmes Acquires Multi-body Simulation Technology Company SIMPACK

Dassault Systèmes

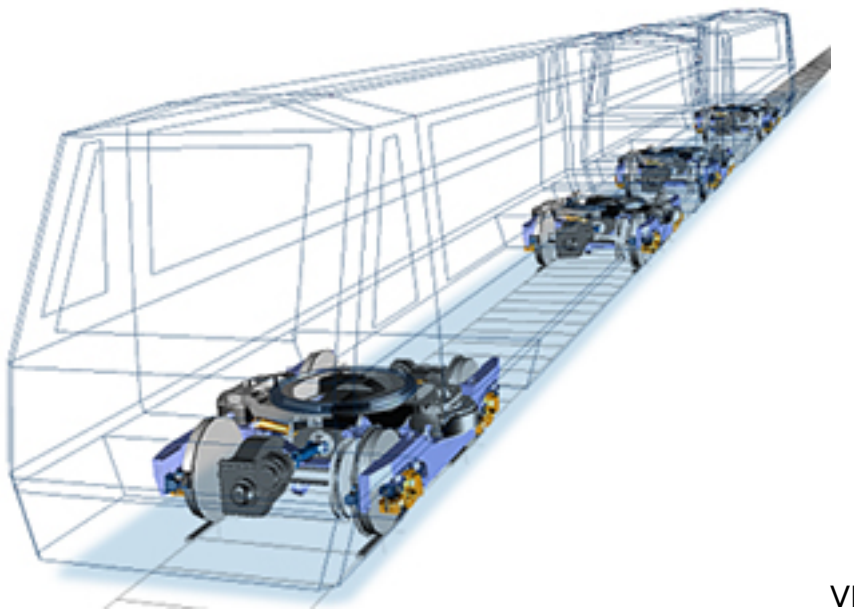

VÉLIZY-VILLACOUBLAY, France — Dassault Systèmes announced the acquisition of SIMPACK [1], a multi-body simulation technologies and solutions company. With the acquisition of SIMPACK, based near Munich, Germany, Dassault Systèmes is expanding its SIMULIA realistic multiphysics simulation technology portfolio to include multi-body mechatronic systems, from virtual concept validation to the real-time experience. SIMPACK has more than 130 customers in the energy, automotive, and rail industries, including Alstom, Bombardier, BMW, Daimler, Honda, Jaguar Land Rover, MAN, and Vestas. The amount of the transaction was not disclosed.

Today's acquisition of SIMPACK, part of a larger, ongoing strategy to continually expand the **3D**EXPERIENCE platform, enables a complete virtual and real product experience, like never before" said Bernard Charlès, President and CEO, Dassault Systèmes. "Consumers expect automobiles, aircraft, and nearly all products to continually get smarter, safer, faster, quieter, and more efficient. This means companies need to do more than engineer everything coming together — such as controls, movement, bending and noise. They need to experience their product as they create it."

IMPACK has demonstrated technology leadership, in particular through complex models, non-linear effects such as friction and flexible structures, efficient numerical algorithms, and real-time capabilities.

"SIMPACK is gaining market share today, and it will be strengthened by its technological, commercial and operational synergies with Dassault Systèmes. SIMPACK has always provided product designers and consumers with a physical experience of a new product long before it comes into production. We have similar technology-driven cultures and a shared long-term commitment to scientific excellence," said Alex Eichberger, Founder and CEO, SIMPACK. "We will join forces and technologies to provide superior virtual and physical experiences, expanding industry solution experiences for transportation and mobility, aerospace and defense and other industries."

ith SIMPACK technologies enhancing the **3D**EXPERIENCE platform, Dassault Systèmes will provide an integrated solution for end-to-end development of advanced systems, combining realistic multi-physics simulation, accurate real-time simulation of mechatronic assemblies, and control of smart systems.

Dassault Systèmes entered into a definitive acquisition agreement with SIMPACK whereby Dassault Systèmes acquired the company in an all-cash transaction. This transaction was completed on July 10, 2014.

About Dassault Systèmes

Dassault Systèmes, the 3DEXPERIENCE Company, provides business and people with virtual universes to imagine sustainable innovations. Its solutions are designed to transform the way products are designed, produced, and supported. Dassault Systèmes' collaborative solutions foster social innovation, expanding possibilities for the virtual world to improve the real world. The group serves over 190,000 customers of all sizes, in all industries, in more than 140 countries.

Source URL (retrieved on *07/08/2015 - 12:37am*):
http://www.scientificcomputing.com/news/2014/07/dassault-syst%C3%A8mes-acquires-multi-body-simulation-technology-company-simpack

Links:
[1] http://www.simpack.com/